# SC1602A ( 16 CHARACTERS x 2 LINES )

## FEATURES

- 5 x 7 DOTS WITH CURSOR
- BUILT-IN CONTROLLER (KS0066 OR EQUIVALENT)
- 5 V POWER SUPPLY
- 1/16 DUTY CYCLE
- 4.2 V LED FORWARD VOLTAGE

## ELECTRICAL CHARACTERISTICS

| ITEM | | SYMBOL | CONDITION | MIN. | TYP. | MAX. | UNIT |
|---|---|---|---|---|---|---|---|
| LCD Operating Voltage | | $V_{DD}$-$V_O$ | T=0℃ | - | 4.8 | - | V |
| | | | T=25℃ | - | 4.5 | - | V |
| | | | T=50℃ | - | 4.2 | - | V |
| Supply Voltage | | $V_{DD}$-$V_{SS}$ | - | 4.7 | 5 | 5.3 | V |
| Supply Current | | $I_{DD}$ | - | - | 2 | 4 | mA |
| Input Voltage | "HIGH" Level | $V_{IH}$ | - | 2.2 | - | $V_{DD}$ | V |
| | "LOW" Level | $V_{IL}$ | - | 0 | - | 0.6 | V |
| Output Voltage | "HIGH" Level | $V_{OH}$ | - | 2.4 | - | - | V |
| | "LOW" Level | $V_{OL}$ | - | - | - | 0.4 | V |

## MECHANICAL DATA

| ITEM | DIMENSIONS | UNIT |
|---|---|---|
| Module Size (W x H x T) | 80.0 x 36.0 x 8.8 ( 12.7 LED ) | mm |
| Viewing Area ( W x H ) | 65.0 x 16.0 | mm |
| Character Size ( W x H ) | 2.96 x 5.56 | mm |
| Character Pitch (W x H) | 3.55 x 5.94 | mm |
| Dot Size ( W x H ) | 0.56 x 0.66 | mm |
| Dot Pitch ( W x H ) | 0.60 x 0.70 | mm |

## BLOCK DIAGRAM

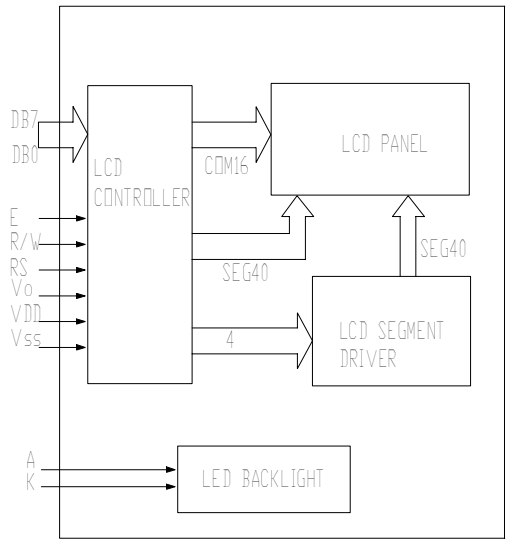


## INTERFACE PIN CONNECTIONS

| NO. | SYMBOL | FUNCTION | NO. | SYMBOL | FUNCTION |
|---|---|---|---|---|---|
| 1 | $V_{SS}$ | Supply Ground | 9 | DB2 | Data Bit 2 |
| 2 | $V_{DD}$ | Supply Voltage | 10 | DB3 | Data Bit 3 |
| 3 | $V_O$ | Contrast Adj. | 11 | DB4 | Data Bit 4 |
| 4 | RS | Register Select | 12 | DB5 | Data Bit 5 |
| 5 | R/W | Read/Write | 13 | DB6 | Data Bit 6 |
| 6 | E | Enable Signal | 14 | DB7 | Data Bit 7 |
| 7 | DB0 | Data Bit 0 | 15 | A | LED Power |
| 8 | DB1 | Data Bit 1 | 16 | K | LED Power |
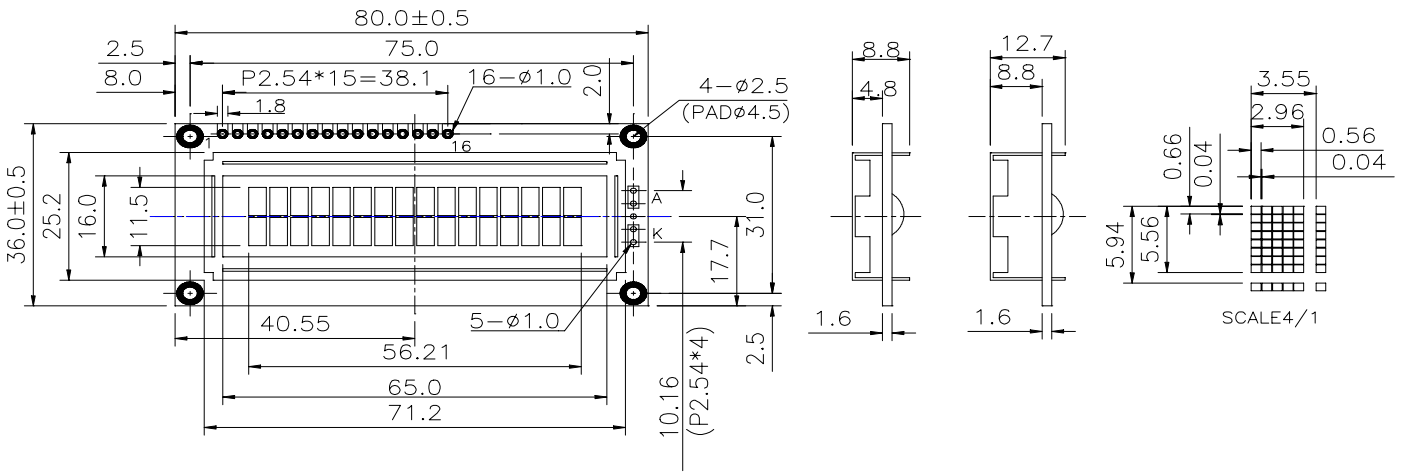
## EXTERNAL DIMENSIONS