SC2002C (20 CHARACTERS x 2 LINES)

FEATURES

- ◆ 5 x 7 DOTS WITH CURSOR
- ◆ BUILT-IN CONTROLLER (KS0066 OR EQUIVALENT)
- ◆ 5 V POWER SUPPLY
- ◆ 1/16 DUTY CYCLE
- ◆ 4.2 V LED FORWARD VOLTAGE

MECHANICAL DATA

ITEM	DIMENSIONS	UNIT
Module Size (W x H x T)	180.0 x 40.0 x 14.5	mm
Viewing Area (W x H)	149.0 x 23.0	mm
Character Size (W x H)	6.00 x 9.66	mm
Character Pitch (W x H)	7.20 x 10.98	mm
Dot Size (W x H)	1.12 x 1.12	mm
Dot Pitch (W x H)	1.22 x 1.22	mm

INTERFACE PIN CONNECTIONS

NO.	SYMBOL	FUNCTION	NO.	SYMBOL	FUNCTION
1	Vss	Supply Ground	9	DB2	Data Bit 2
2	VDD	Supply Voltage	10	DB3	Data Bit 3
3	Vo	Contrast Adj.	11	DB4	Data Bit 4
4	RS	Register Select	12	DB5	Data Bit 5
5	R/W	Read/Write	13	DB6	Data Bit 6
6	E	Enable Signal	14	DB7	Data Bit 7
7	DB0	Data Bit 0	15	K	LED Power
8	DB1	Data Bit 1	16	A	LED Power

ELECTRICAL CHARACTERISTICS

ITEM		SYMBOL	CONDITION	MIN.	TYP.	MAX.	UNIT
LCD Operating Voltage		VDD-Vo	T=0℃	-	4.8	-	V
			T=25℃	-	4.5	-	V
			T=50℃	-	4.2	-	V
Supply Voltage		VDD-Vss	-	4.7	5	5.3	V
Supply Current		IDD	-	-	3.2	6	mA
Input Voltage	"HIGH" Level	VIH	-	2.2	-	VDD	V
	"LOW" Level	VIL	-	0	-	0.6	V
Output Voltage	"HIGH" Level	VOH	-	2.4	-	-	V
	"LOW" Level	VOL	-	-	-	0.4	V

BLOCK DIAGRAM

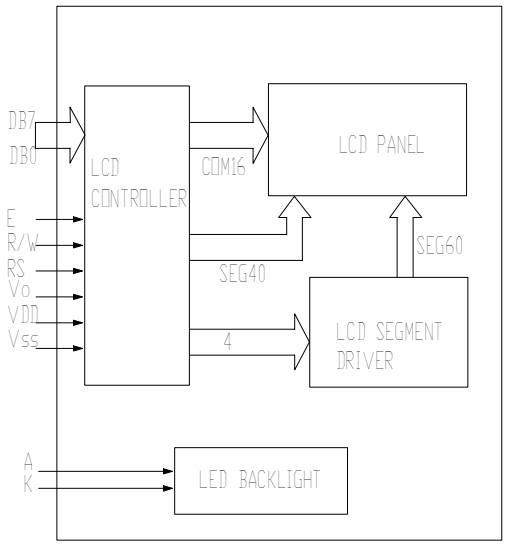
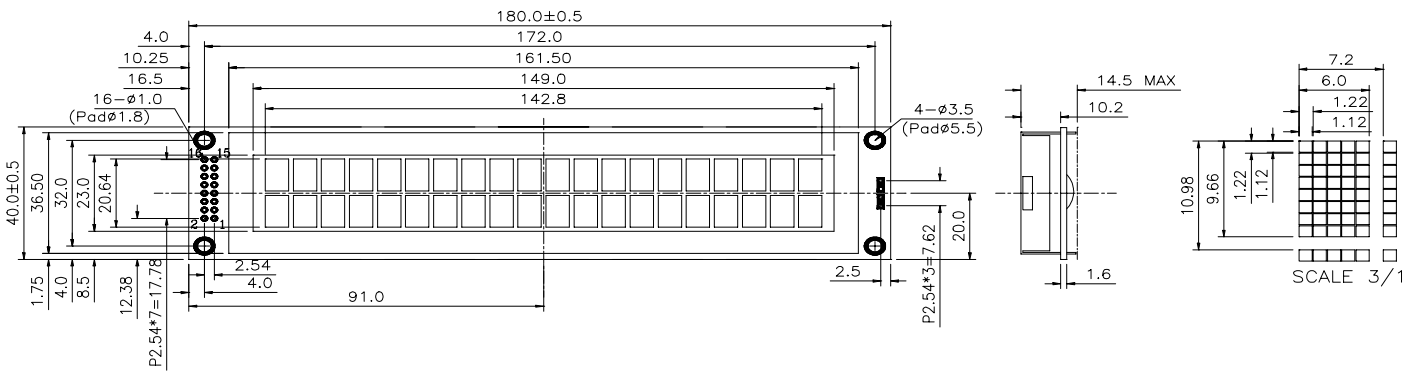
EXTERNAL DIMENSIONS